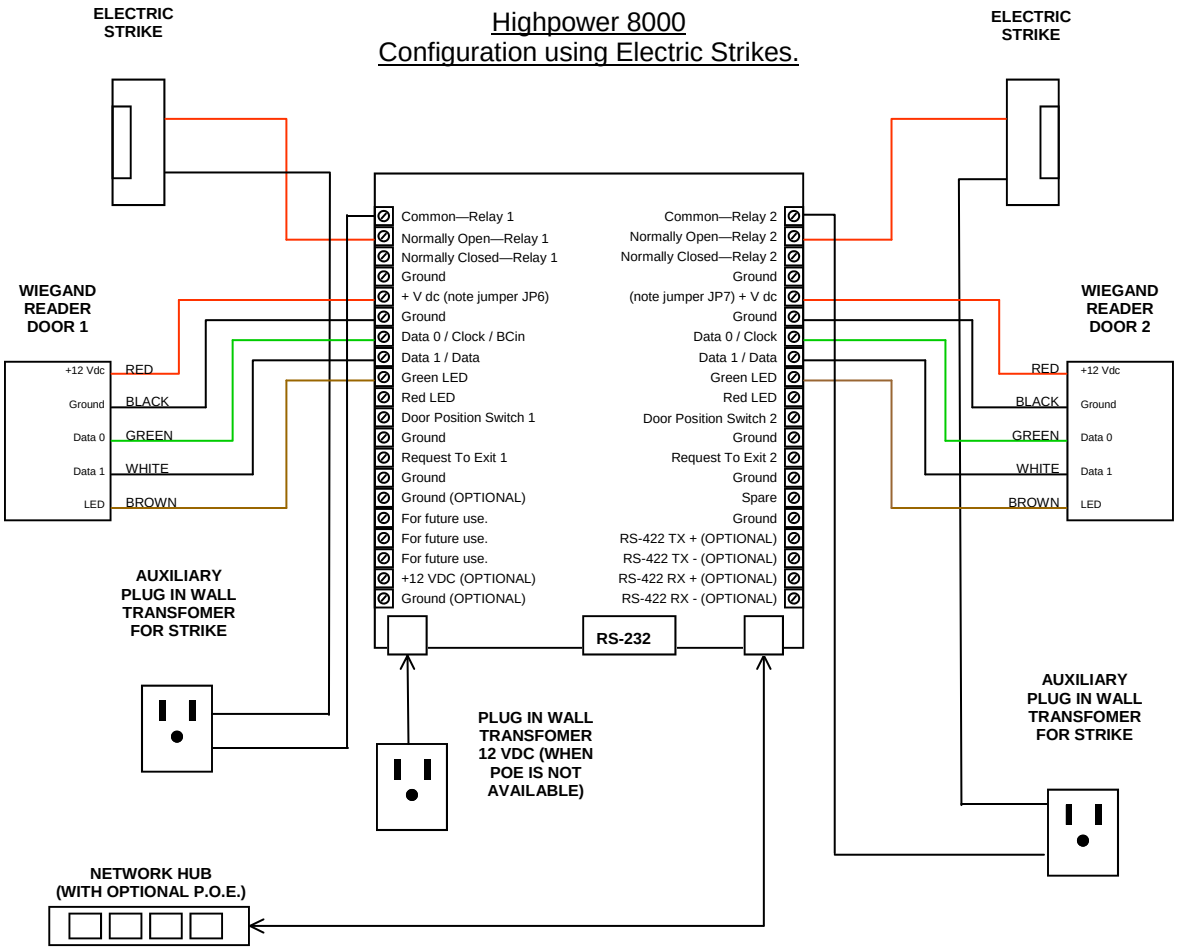Highpower 8000
Configuration using Electric Strikes.